REVISION RECORD			
LTR	ECO NO:	APPROVED:	DATE:
	Rev1 Test Points Added	July 13 1999	
	Rev2 output pads moved	Aug 31 1999	

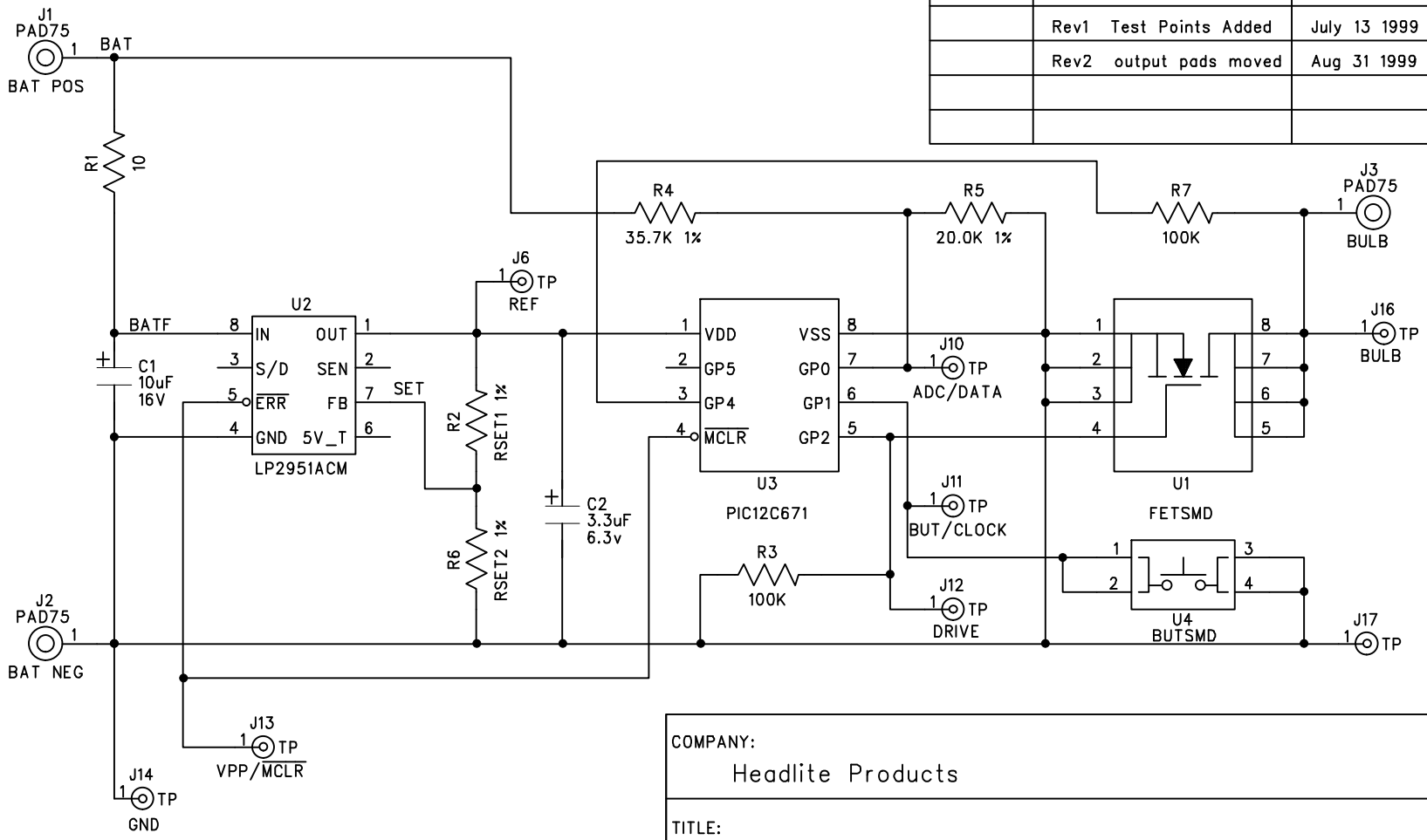

COMPANY:
Headlite Products

TITLE:
LVR3C Microcontroller based Lightbulb Voltage Regulator
Part Number P101 Rev2

DRAWN: Willie Hunt	DATED: March 18 1999		
CHECKED: Willie Hunt	DATED: March 18 1999		
QUALITY CONTROL:	DATED:		
RELEASED:	DATED:		

CODE:	SIZE:	DRAWING NO:	REV:
SCALE:		SHEET: 1 OF 1	