REVISION RECORD			
LTR	ECO NO:	APPROVED:	DATE:
	4.2 volt output	Mar 18 1999	
	Auto sense ON/OFF	Apr 20 1999	
	Revised Configuration #1	May 12 1999	

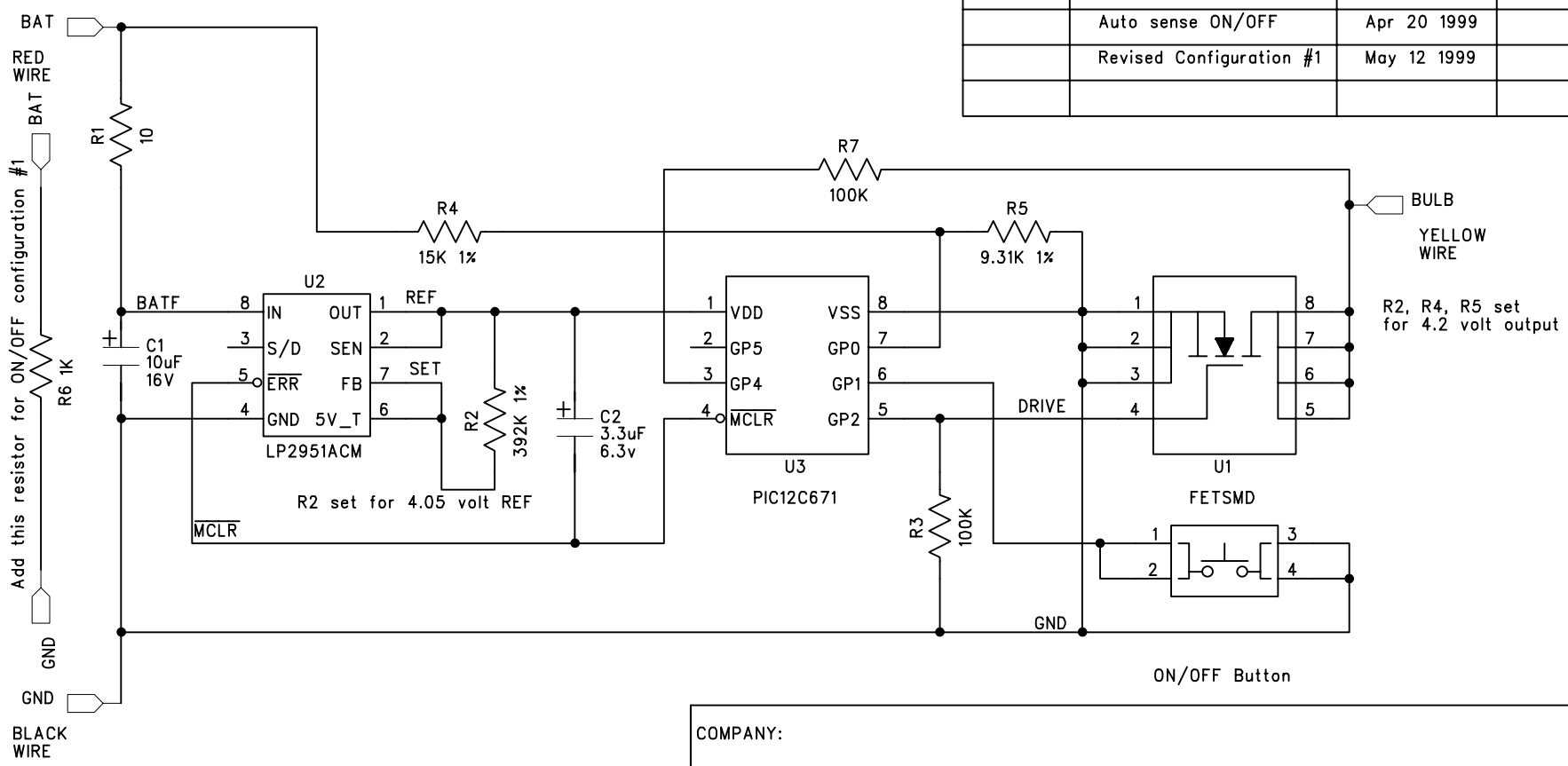

COMPANY:

TITLE:
LVR3A Microcontroller based Lightbulb Voltage Regulator

DRAWN: Willie Hunt	DATED: Feb 13 1999	CODE:	SIZE:	DRAWING NO:	REV:
CHECKED: Willie Hunt	DATED: Feb 13 1999				
QUALITY CONTROL:	DATED:				
RELEASED:	DATED:	SCALE:		SHEET: 1 OF 3	