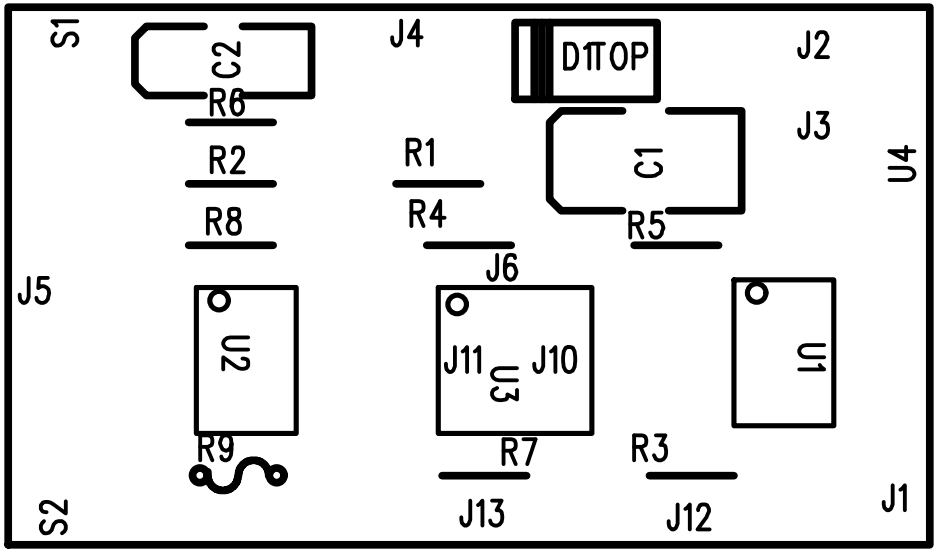

LVR3E1.pcb – Wed Mar 22 06:34:11 2000